Quick Start Guide

DuraMAC™ - Variable Speed Booster System

Simplex | Duplex

STOP

Simplex

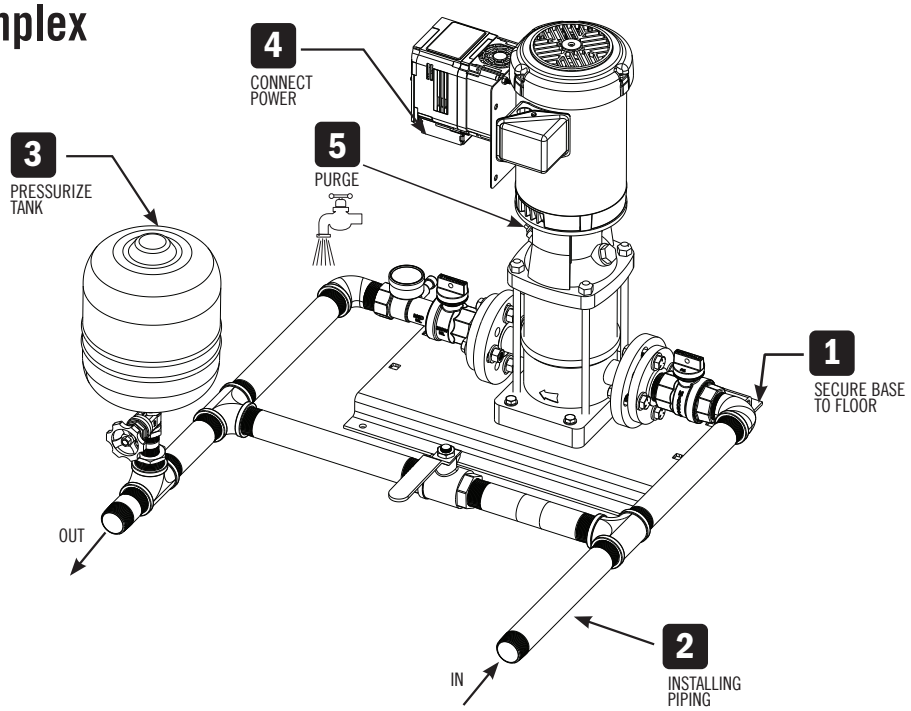

Duplex

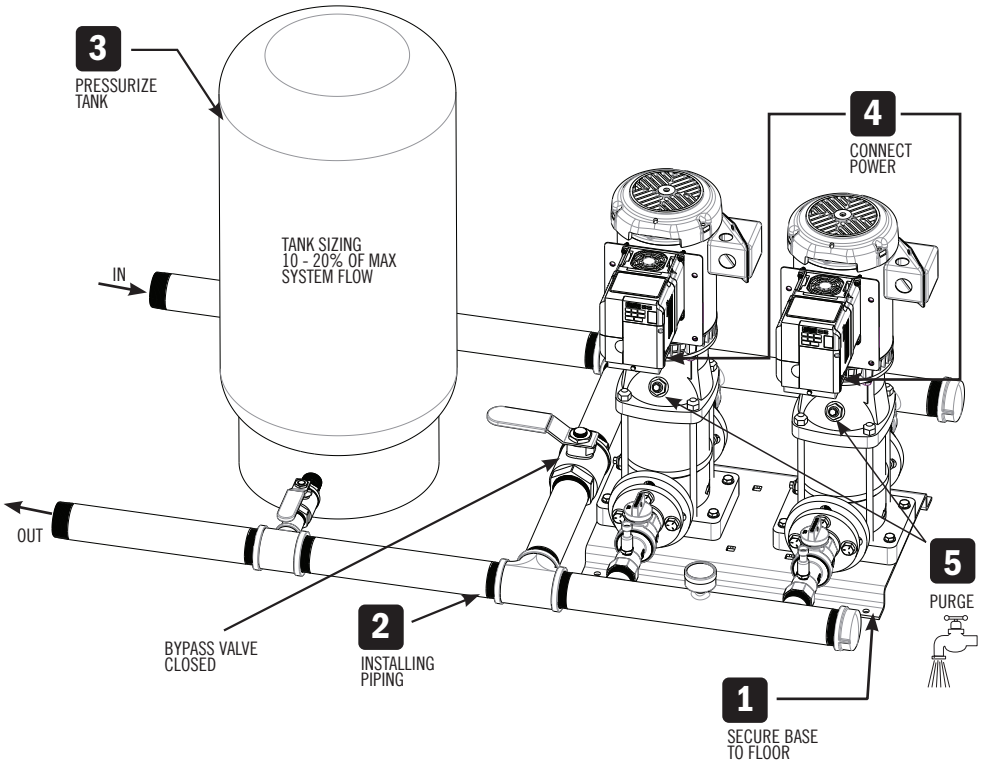

6 SET THE SYSTEM SET POINT

Press ENTER to access or modify the system setpoint in parameter Q1-01 within the iQpump Micro Quick Setup Menu. iQpump Micro Quick Setup Menu. Use RESET to select the digit and ∧ ∨. Next press ENTER to store setpoint.

7 START SYSTEM

Press AUTO to start the system.

WARNING: It is unlawful in **CALIFORNIA & VERMONT (effective 1/1/2010); MARYLAND (effective 1/1/2012); LOUISIANA (effective 1/1/2013) and the UNITED STATES OF AMERICA (effective 1/4/2014)** to use any product in the installation or repair of any public water system or any plumbing in a facility or system that provides water for human consumption if the wetted surface area of the product has a weighted average lead content greater than 0.25%. This prohibition does not extend to service saddles used in California, Louisiana or under USA Public Law 111-380. **WARNING:** This product can expose you to chemicals including lead, which is known to the State of **CALIFORNIA** to cause cancer and birth defects or other reproductive harm. For more information go to: www.P65Warnings.ca.gov.

SEE MANUAL 3210-652 FOR MORE INFORMATION